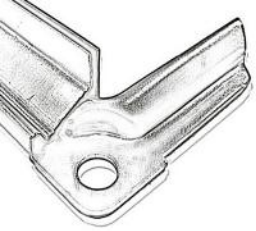

RAMI SYSTEM®

HVAC accessories manufacturer since 1986

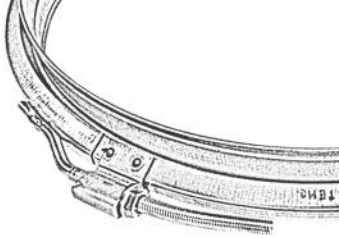

TECHNICAL DATA SHEET 30 B-L CLIP RAMI-SYSTEM® CORNER

RAMI-SYSTEM® IDENTIFICATION CODE	**2E002071**
PRODUCT NAME	**GALVANIZED CORNER SIZE 30 B-L CLIP**
PRODUCT'S APPLICATION FIELD	**RAMI-SYSTEM® 30 mm FLANGES**
MATERIAL SPECIFICATION	**GALVANIZED STEEL DX51+Z275 MAC**
THICKNESS (mm)	**2,5**
PCS / BOX	**250**
GROSS WEIGHT / BOX (Kg)	**22**

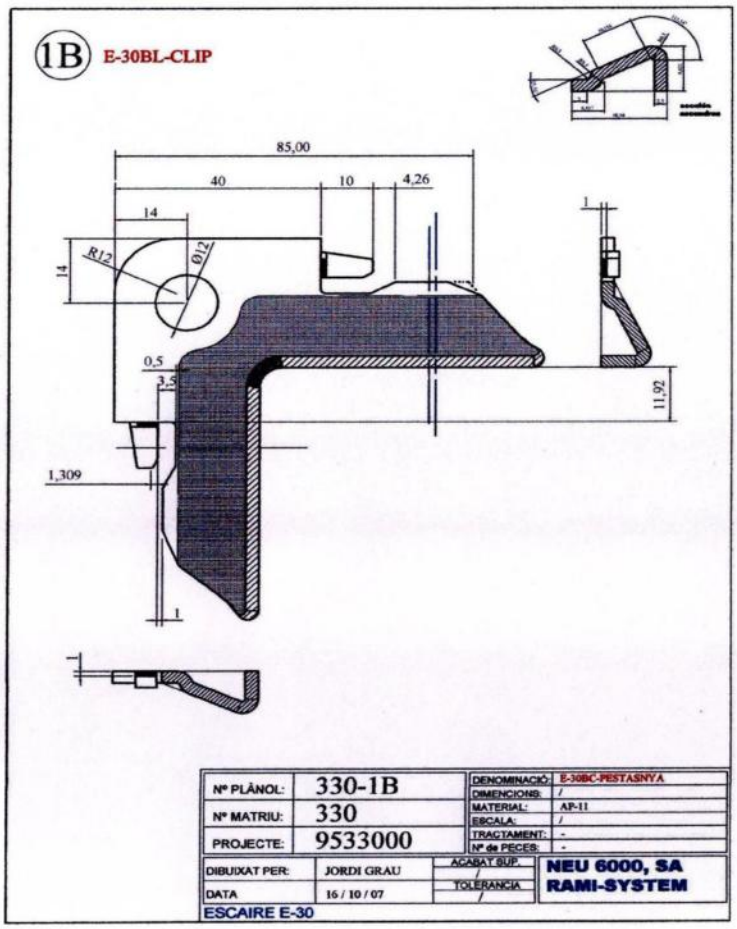

Information contained herein is based on careful tests and experience. It reflects our knowledge and is for guidance purpose only. It is given in good faith and user should ensure that the product is fit for purpose before any application. The quoted values are average and should not be taken as maximum or minimum values for specific purposes. Manufacturer and distributor are not responsible for any non-recommended use or consequential damage.

NEU 6000, S.A.
Pol. Ind. "La Torre"
Av. Joaquim de Barnola i Bassols, 6
08760 Martorell - Barcelona
SPAIN

T. +34 93 774 57 09
F. +34 93 774 18 33
neu@rami-system.es
www.rami-system.es